Blackview

Enjoy Smart Life

XPLORE 6 Pro

https://www.blackview.hk

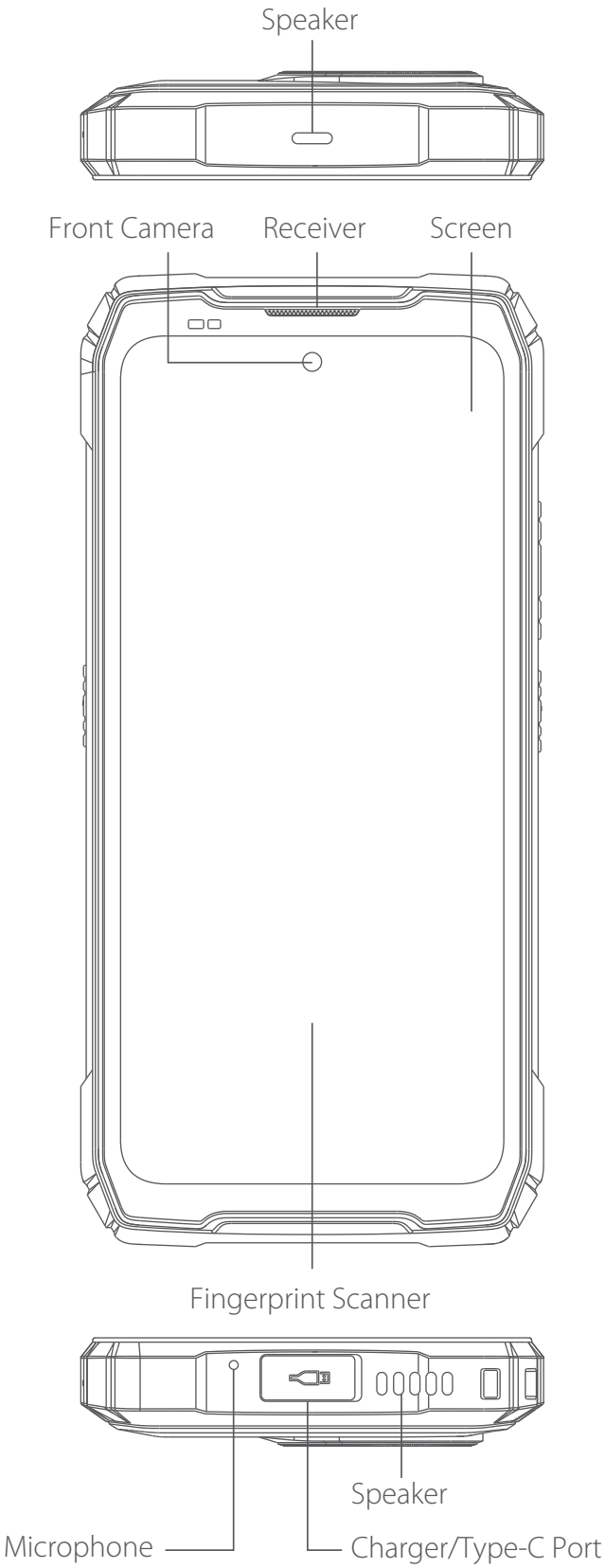
Speaker
Front Camera
Receiver
Screen
Fingerprint Scanner
Speaker
Microphone
Charger/Type-C Port

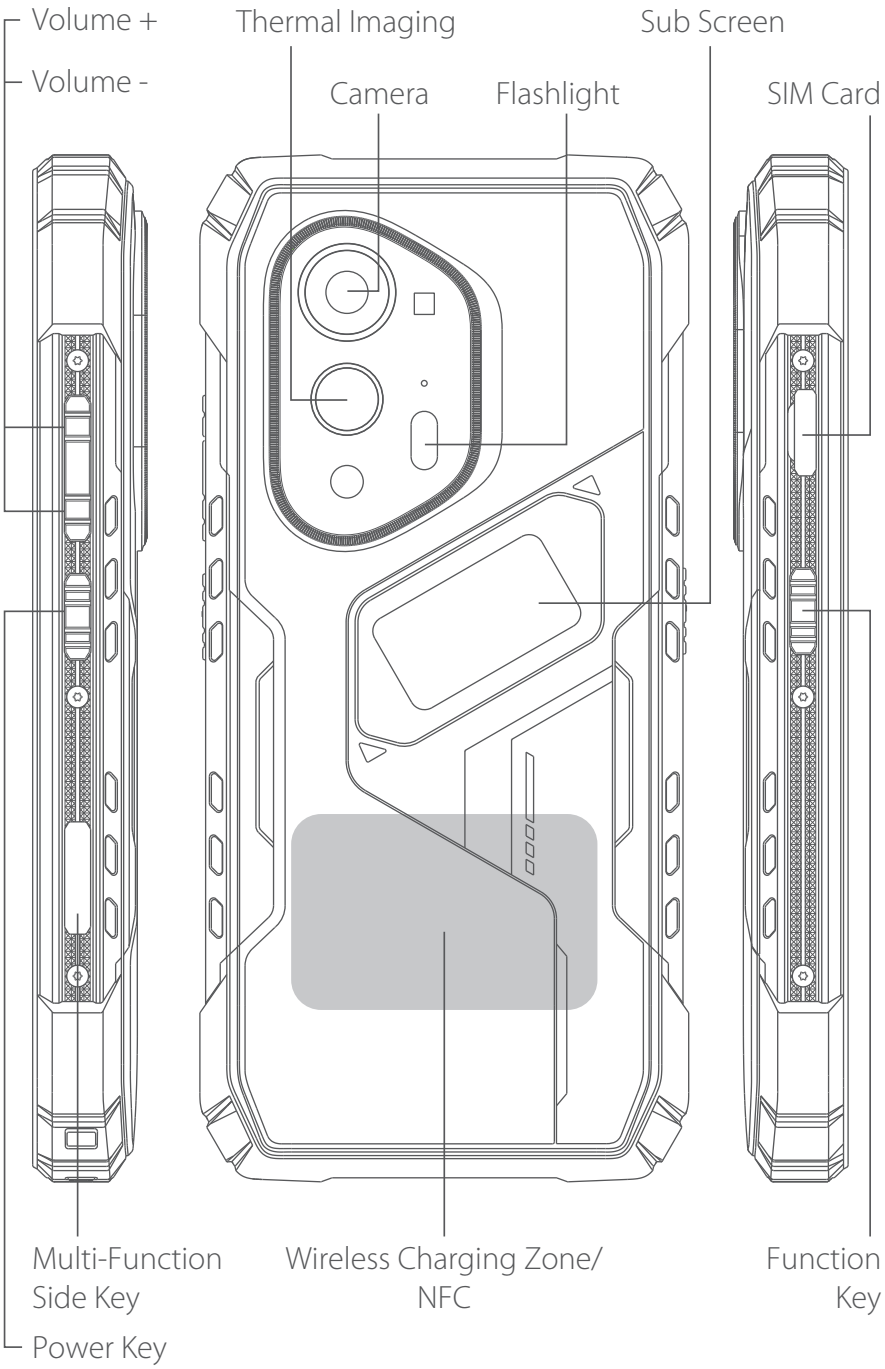
Volume +
Volume -
Thermal Imaging
Camera
Flashlight
Sub Screen
SIM Card
Multi-Function Side Key
Power Key
Wireless Charging Zone/ NFC
Function Key

❶ How to insert the card

To make sure your smartphone be able to call, put the SIM card in the following order.

- Insert the pad to pull out SIM card slot.

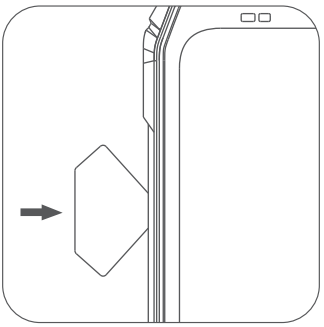

- Take out the card slot and place the Nano card with the metal side facing up. Make sure the bevel angle is aligned with the bevel angle of the card slot and place it in the corresponding card slot.

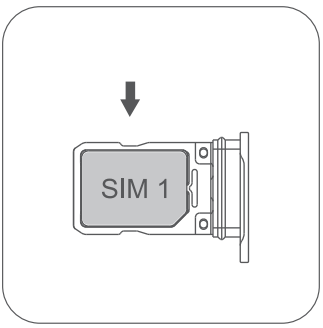

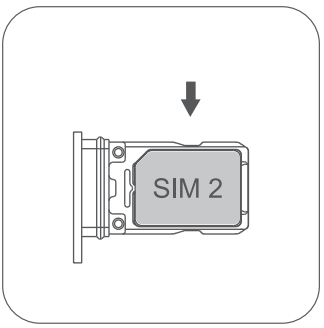

- Insert the card tray into the device following the direction of the arrow.

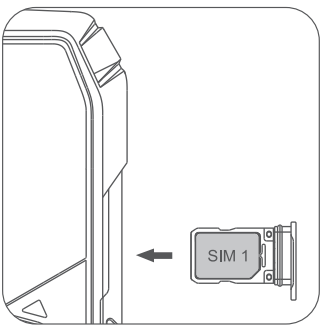

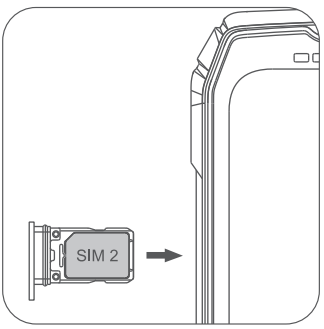

❷ How to boot

- **Non-removable battery**
- **Press the power button for 3-5 seconds to boot**

❸ How to send SMS, MMS

SMS

- Open the SMS app
- Select New Information
- Enter a phone number or browse your contacts
- Select Edit Information and enter your text
- Send

MMS - video

- When writing a text message
- Select images, videos or other files you want to add, even You can take a new picture or video right away.
- Selecting or sending

❹ Language switching settings

- Main menu--settings-system setting--language and input method.
- Language and input method--language--language adding
- Select the language you need, the system will. automatically jump back to the language interface.
- Select the icon after the language bar and drag it to the first one.

❺ SAR

- For the countries that adopt the SAR limit of 2.0 W/kg over 10 grams of tissue. The device complies with RF specifications when used at a distance of 5mm from your body.
- For the countries that adopt the SAR limit of 1.6 W/kg over 1 gram of tissue. The device complies with RF specifications when used near your ear or at a distance of 10mm from your body. SAR information on this can be viewed on-line at http://www.fcc.gov/oet/ea/fccid/.

❻ Tri-proof device performance test - the dustproof and waterproof level of this product has been certified as IP68

- When doing the waterproof test, the water depth is within 1.5 meters, and the mobile phone is immersed in water within 30 minutes.
- Anti-drop test: Height within 1m, and phone is falling itself.
- Pressure test: Keep the ground flat and do not bear pressure at a single point.

❼ Safety- In order to ensure safely using the product, you must strictly abide by the following rules

- The phone should be at least 15 cm away from any medical implant or rhythm adjuster and never put the device in your coat pocket.
- Do not expose the device and other batteries together with the high temperatures or heat-generating equipment such as sunlight, heaters, microwave ovens, ovens or water heaters. Overheating of the battery can cause an explosion.
- When charging is complete or not charging, disconnect the charger from the device and unplug the charger from the power outlet.
- If the device is equipped with a non-removable battery, do not replace the battery yourself to avoid damaging the battery or device.
- Use of an unapproved or incompatible power source, charger or battery may cause fire, explosion or other hazards.
- Do not disassemble or reset the battery, insert other objects, immerse in water or other liquids to avoid battery leakage, overheating, fire or explosion.
- Do not drop, crush, scratch or puncture the battery to avoid subjecting the battery to excessive external pressure, resulting in internal short-circuit and overheating of the battery.
- The company does not bear the responsibility for accidents caused by non-standard related charging equipment.
- Although the equipment is durable, it is not indestructible. We still recommend avoiding knocking, throwing, crushing, perforating or bending this device.
- Hereby, Shenzhen DOKE Electronic Co., Ltd declares that this radio equipment type is in compliance with Directive 2014/53/EU. The full text of the EU declaration of conformity is available at the following internet address: https://support.blackview.hk/download/2

❽ Maintenance

- Thoroughly understand the maintenance of this mobile phone to use the mobile phone more safely and effectively, and extend the service life of the mobile phone as much as possible.
- Please follow the instructions in the manual to open the phone, disassemble the accessories, and do not try other methods.
- Please avoid falling, knocking or shaking your phone. Rough handling of the phone can cause the screen to rupture, damaging the internal circuit board and the delicate structure.
- Do not use chemical solvents or detergents to clean your phone. Wipe the phone case with a soft cotton cloth dampened with water or a mild soap.
- Clean the lens with a clean, dry, soft cloth. (Example: camera lens) and display.
- If you encounter an abnormal image such as a crash during use, the processing method is as follows: For a mobile phone that cannot remove the battery, please press and hold the power button for more than 12 seconds, the mobile phone will be forced to restart (unlock the phone when restarting) It can solve the general bug; for the mobile phone that can remove the battery, please remove the battery, then insert the battery and restart it to solve the bug.
- When the charger is not in use, please unplug it from the power outlet. Do not connect the battery that has been fully charged to the charger for a long time, as overcharging will shorten the battery life.

❾ Check your certification number

- If you want to check your certification number, please follow these steps: **Settings - About Phone - Certification.**

⑩ CE Caution:

Use careful with the earphone maybe possible excessive sound pressure from earphones and headphones can cause hearing loss.

- Restrictions in the 5 GHz band:
  According to Article 10 (10) of Directive 2014/53/EU, the packaging showsthat this radio equipment will be subject to some restrictions when placed on the market in Belgium (BE), Bulgaria(BG), the Czech Republic(CZ), Denmark(DK), Germany(DE), Estonia(EE), Ireland(IE), Greece(EL), Spain(ES), France(FR), Croatia(HR), Italy(IT), Cyprus(CY), Latvia(LV), Lithuania(LT), Luxembourg(LU), Hungary(HU), Malta(MT), Netherlands(NL), Austria(AT), Poland(PL), Portugal(PT), Romania(RO), Slovenia(SI), Slovakia(SK), Finland(FI), Sweden (SE), the Turkey(TR), Norway(NO), Switzerland(CH), Iceland (IS), and Liechtenstein (LI).
  The WLAN function for this device is restricted to indoor use only when operating in the 5150 to 5250 MHz frequency range.

ES	LU	RO	CZ	FR
HU	SI	DK	HR	BE
BG	DE	EE	IE	EL
IT	CY	LV	LT	SK
MT	NL	AT	PL	PT
FI	SE	TR	NO	CH
IS	LI			

- Declaration: Our equipment which support 5G Wi-Fi all meet the above EU Standards. Otherwise, they do not meet the above standards.
  The object of the declaration described above is in conformity with the essential requirements of the relevant Union harmonization legislation: Radio Equipment Directive RED (2014/53/EU).

⓫ FCC Caution:

Any changes or modifications not expressly approved by the party responsible for compliance could void the user's authority to operate this equipment.
This device complies with Part 15 of the FCC Rules. Operation is subject to the following two conditions:
(1) This device may not cause harmful interference, and
(2) This device must accept any interference received, including interference that may cause undesired operation.
This Product meets the government's requirements for exposure to radio waves. The guidelines are based on standards that were developed by independent scientific organizations through periodic and thorough evaluation of scientific studies. The standards include a substantial safety margin designed to assure the safety of all persons regardless of age or health.

NOTE: This equipment has been tested and found to comply with the limits for a Class B digital device, pursuant to Part 15 of the FCC Rules. These limits are designed to provide reasonable protection against harmful interference in a residential installation. This equipment generates, uses and can radiate radiofrequency energy and, if not installed and used in accordance with the instructions, may cause harmful interference to radio communications.

However, there is no guarantee that interference will not occur in a particular installation. If this equipment does cause harmful interference to radio or television reception, which can be determined by turning the equipment off and on, the user is encouraged to try to correct the interference by one or more of the following measures:
-- Reorient or relocate the receiving antenna.
-- Increase the separation between the equipment and receiver.
-- Connect the equipment into an outlet on a circuit different from that to which the receiver is connected.
-- Consult the dealer or an experienced radio/TV technician for

⓬ IC Caution:

This device contains licence-exempt transmitter(s)/receiver(s) that comply with Innovation, Science and Economic Development Canada's licence-exempt RSS(s). Operation is subject to the following two conditions:
This device may not cause interference.
This device must accept any interference, including interference that may cause undesired operation of the device.
This Class [B] digital apparatus complies with Canadian ICE-003.

Français
L'émetteur/récepteur exempt de licence contenu dans le présent appareil est conforme aux CNR d'Innovation, Sciences et Développement économique Canada applicables aux appareils radio exempts de licence.
L'exploitation est autorisée aux deux conditions suivantes:
L'appareil ne doit pas produire de brouillage;
L'appareil doit accepter tout brouillage radioélectrique subi, même si le brouillage est susceptible d'en compromettre le fonctionnement.

Cet appareil numérique de la classe [B] est conforme à la norme NMB-003 du Canada。

The device has been evaluated portable device RF exposure requirements. The device is kept at least 10 mm away from the user's body.

IC SAR Statement:
Mobile Phone has been tested and meets applicable limits for radio frequency (RF) exposure. Specific Absorption Rate (SAR) refers to the rate at which the body absorbs RF energy. The SAR limit is 1.6 watts per kilogram in Canada that set the limit averaged over 1 gram of tissue. During testing, Mobile Phone radios are set to their highest transmission levels and placed in positions that simulate uses against the head, with no separation, and when worn or carried against the torso of the body, with 10mm separation. To reduce exposure to RF energy, use a hands-free option, such as the built-in speaker phone, the supplied headphones, or other similar accessories. Cases with metal parts may change the RF performance of the device, including its compliance with RF exposure guidelines, in a manner that has not been tested or certified. Although this device has been tested to determine SAR in each band of operation, not all bands are available in all areas. Bands are dependent on your service provider's wireless and roaming networks.

Facebook Group

Facebook

YouTube

TikTok

Instagram

Manufacturer: Shenzhen Doke Electronic Co., LTD
Address: 801, Building3, 7th Industrial Zone, Yulv Community, Yutang Road, Guangming District, Shenzhen, China.

www.blackview.hk

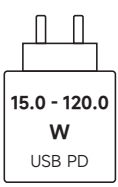

The power delivered by the charger must be between min 15 Watts required by the radio equipment, and max 120 Watts in order to achieve the maximum charging speed.